REVISIONS

ECN	REV	DESCRIPTION	DATE	APPROVED
N/A	1.0	INITIAL RELEASE	07/06/07	TGP
	2.0	VALUES AND SILKSCREEN CHANGES	09/17/07	TGP
	A	RELEASE – FRE=21KHz DC=16–92%	08/20/08	TGP

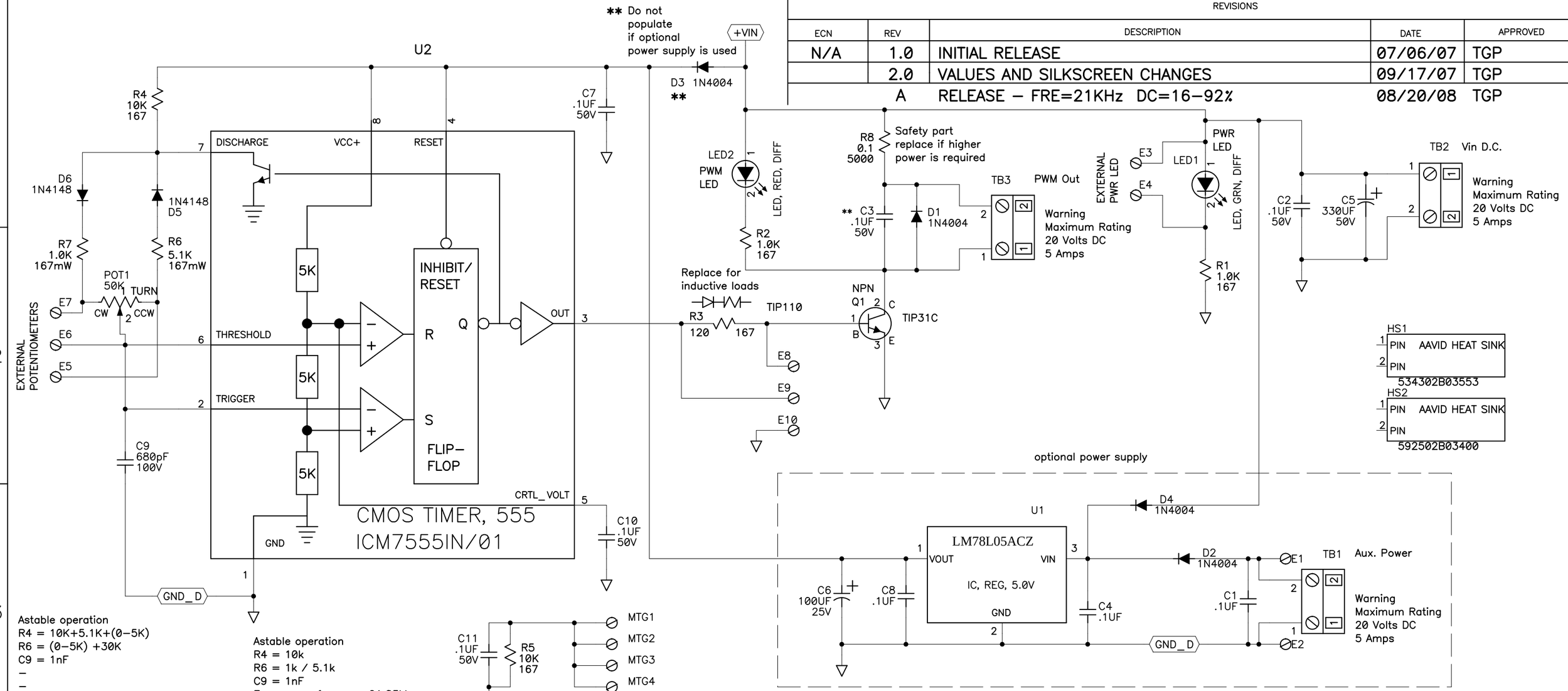

Astable operation
R4 = 10K+5.1K+(0–5K)
R6 = (0–5K) +30K
C9 = 1nF
–
–
TM=.693 * (R4+R7+2.5K) * C4 – HIGH
TS=.693 * ((2.5K)+R6) * C4 – LOW
FOUT= 1 / (TM+TS)

Astable operation
R4 = 10k
R6 = 1k / 5.1k
C9 = 1nF
Frequency of approx. 21.83khz
Duty Cycle of 16–92%
Tm = ontime 42.2 uS – 7.62
Ts = off time 3.53 uS – 38.18

Danger statements are a description of an imminent hazards that will result in death or serious injury if not avoided and should be limited to the most extreme situations.
Danger: Description of imminently hazard and possible resulting injures

Warning statements are a description of a potentially hazardous situation which if not avoided could result in death or serious injury.
Warning: Description of hazard and possible resulting injures.

Caution statements are a description of a potentially hazardous situation which if not avoided could result in minor or moderate injury. It could also advise against unsafe practices
Caution: Description of hazard and possible resulting injures

** DO NOT POPULATE

ALL INFORMATION CONTAINED IN OR DISCLOSED BY THIS DOCUMENT IS CONSIDERED PROPRIETARY BY CADX SERVICES, INC. AND IS DELIVERED TO YOU IN CONFIDENCE. ALL DESIGN, MANUFACTURING, USE, PRODUCTION, AND ALL SALES RIGHTS, ARE EXPRESSLY PRESERVED BY AND TO CADX SERVICES, INC. AND COMMUNICATION OF THIS INFORMATION TO OTHERS IS PROHIBITED WITHOUT PRIOR WRITTEN CONSENT OF CADX SERVICES, INC.

DASH	NEXT ASSY	MODEL USED
	N/A	N/A

APPLICATION

TOLERANCES UNLESS SPECIFIED
.X .1
.XX .02
.XXX .001
ANGLES 2 DEG.
.001-.063 DIA. +/- .003
.064-.188 DIA. +.004 -.003
.189 AND OVER +/- .005

DIMENSIONS ARE IN INCHES
DIMENSIONS PER ANSI Y14.5
UNLESS SPECIFIED

DO NOT SCALE DRAWING
MATERIAL
FINISH

DRAWN	CADX Services
CHECKED	N/A
ENG APVD	N/A
QA APVD	N/A
MFG APVD	N/A
DOC CONT	N/A
RELEASE	N/A

CADX Services, Inc.
PO Box 311 Honeoye Falls, NY 14472
Tel: 585–624–1491
Fax: 585–582–1101
Web: www.cadx–pcb.com
sales@cadx–pcb.com

SCHEMATIC
PWM, DRIVE, 60W, 555, TH

SCHEMATIC	KS–PWM–60W–T–TH–000A REV. A	PCB	KF–PWM–60W–T–TH–0001 REV. 2.0
PRODUCT	KA–PWM–60W–T–TH–0001 REV. 2.0	GERBERS	KF–PWM–60W–T–TH–0001 REV. 2.0

SIZE	DWG NO.	REV
B	KS–PWM–60W–T–TH–000A	A

SCALE NONE | DATE Tue Oct 11, 2011 | SHEET 1 of 1